INTEGRATION OF EE IN BUILDINGS – PART 3

HVAC systems

Dr Miriam Benedetti, Researcher, ENEA

Training course on Energy Efficiency and Renewable Energy Sources in buildings

26 February 2020 – Tunis, Tunisia

Funded by the European Union

Heating & Ventilation and Air Conditioning (HVAC)

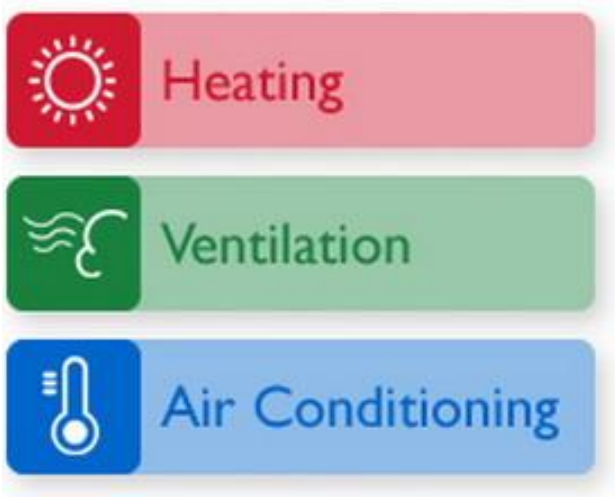

Brainstorming

- Have I ever felt uncomfortable (e.g. too hot or too cold) in a building/room?
- What do I know about HVAC systems?
- What do I expect to know about HVAC systems at the end of this course?

What is an HVAC system?

- Heating Ventilation and Air Conditioning (HVAC) systems regulate temperature, ventilation, and humidity level to ensure the physical comfort of the occupants in commercial and industrial buildings and/or the conditions required by industrial processes or equipment.

- HVAC systems adapt and function in response to:
  - External thermal loads (weather conditions and their effect on the building);
  - Internal thermal loads (people, processes, equipment in the building).

- Many of the existing HVAC systems were not designed with energy efficiency as one of the design factors.

Heat exchange and thermal loads

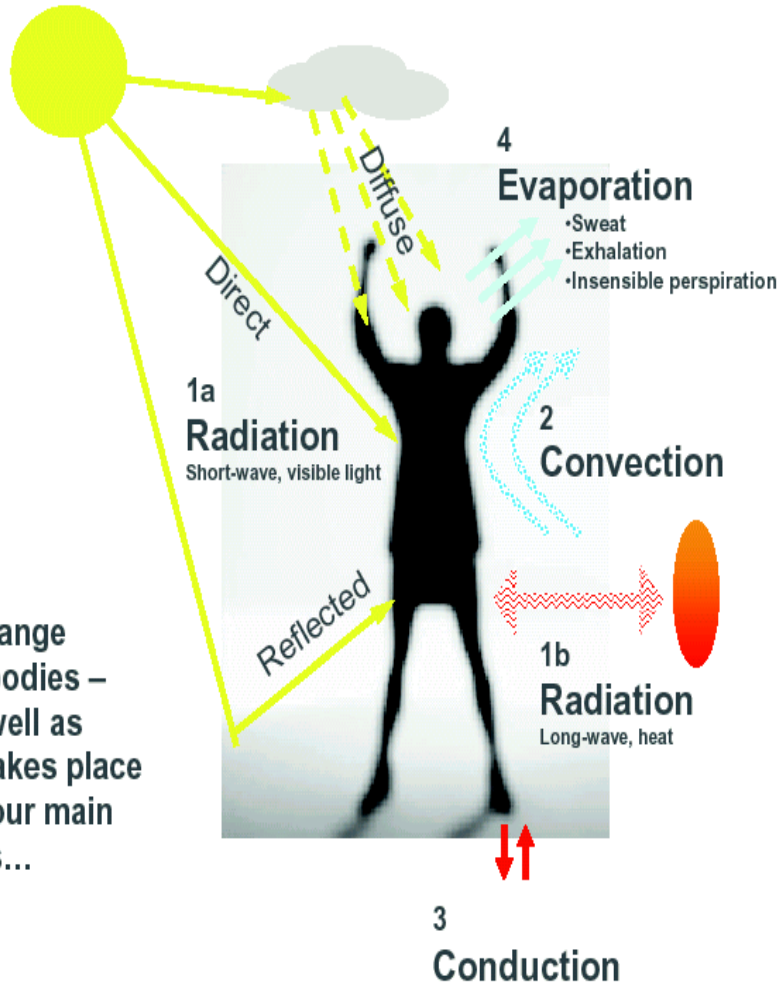

Heat exchange between bodies – living as well as others – takes place through four main processes...

Heat exchange and thermal loads

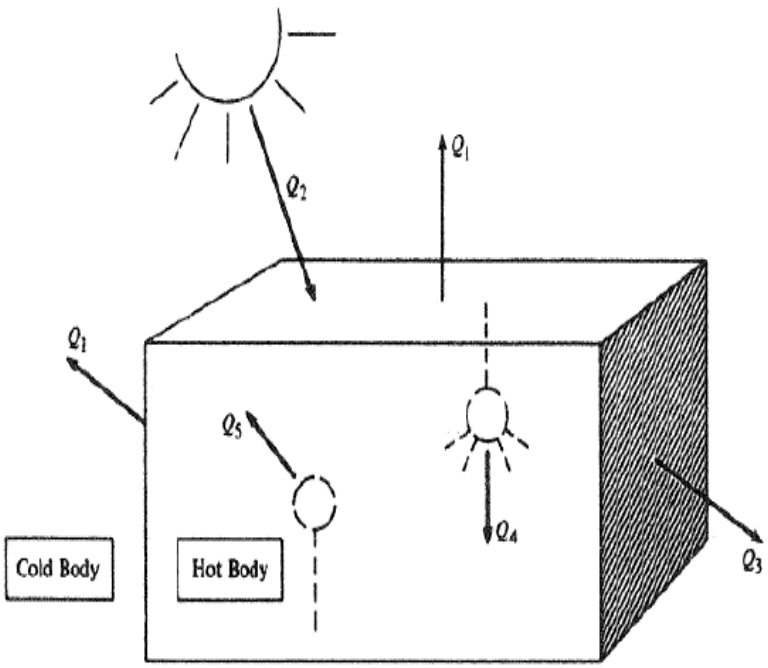

Heat Loss = $Q_1 + Q_3 - Q_2 - Q_4 - Q_5$

Winter

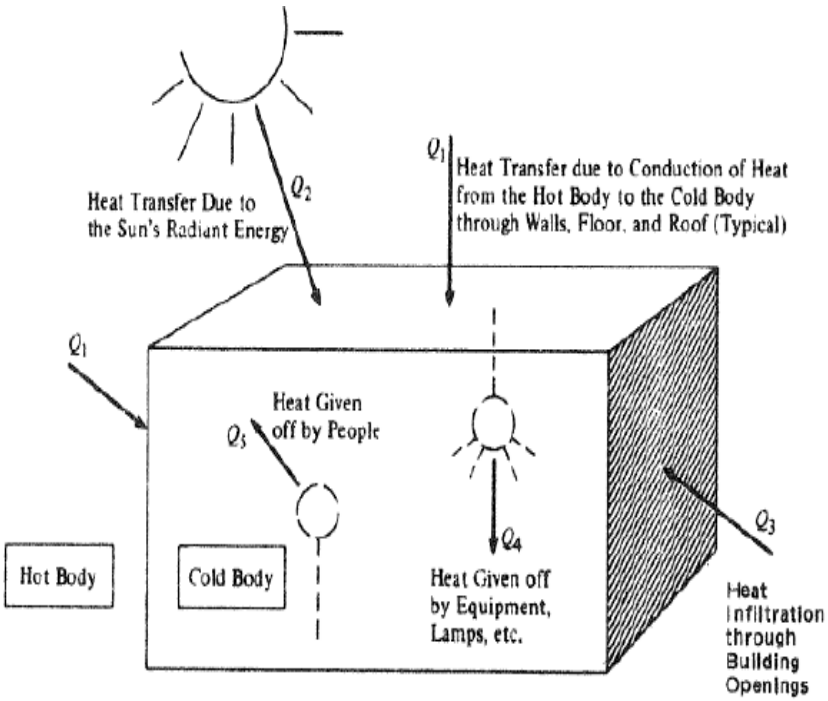

Heat Gain = $Q_1 + Q_2 + Q_3 + Q_4 + Q_5$

Summer

Typical recommended indoor settings – temperature and humidity

Area	Indoor Design Conditions Temperature, °C		Relative Humidity, %	
	Winter	Summer	Winter	Summer
Offices,	20 to 24 °C	23 to 26 °C	20 to 30%	50 to 60%
Guest rooms	23 to 24°C	23 to 26°C	30 to 35%	50 to 60%
Lobbies	20 to 23°C	23 to 26°C	30 to 35%	40 to 60%
Apartments and studio rooms	21 to 23°C	23 to 26°C	30 to 35%	50 to 60%

Reference: ASHRAE Handbook—HVAC Applications

Typical recommended indoor settings – air speed and air change per hour

AIR SPEED

- Air speed from outlets: 0.15 - 0.25 m/s, (EU=0.25 m/s, USA = 0.4 m/s)
- Fresh air per person: 7.0 - 9.5 L/s.

Or CO2 less than 1000 PPM.

AIR CHANGE PER HOUR

$$ACH = \frac{air \quad flow \ \left(m^3/h\right)}{Room \ \ air \ \ volume\left(m^3\right)}$$

- Dwellings 0.5 ach/h
- Offices 1-2 ach/h
- Schools 3-4 ach/h

Typical recommended indoor settings – Carbon Dioxide (CO2) level

- Outdoor 300-400 ppm*
- Well ventilated room 700 ppm
- **Recommended value 1000 ppm**
- Limit value in work premises 5000 ppm
- Headache, increased breathing 20.000 ppm
- Exhaled air 40.000 ppm
- Unconscious 100.000 ppm

*parts per million volume-measure

Typologies of Air Conditioning Systems

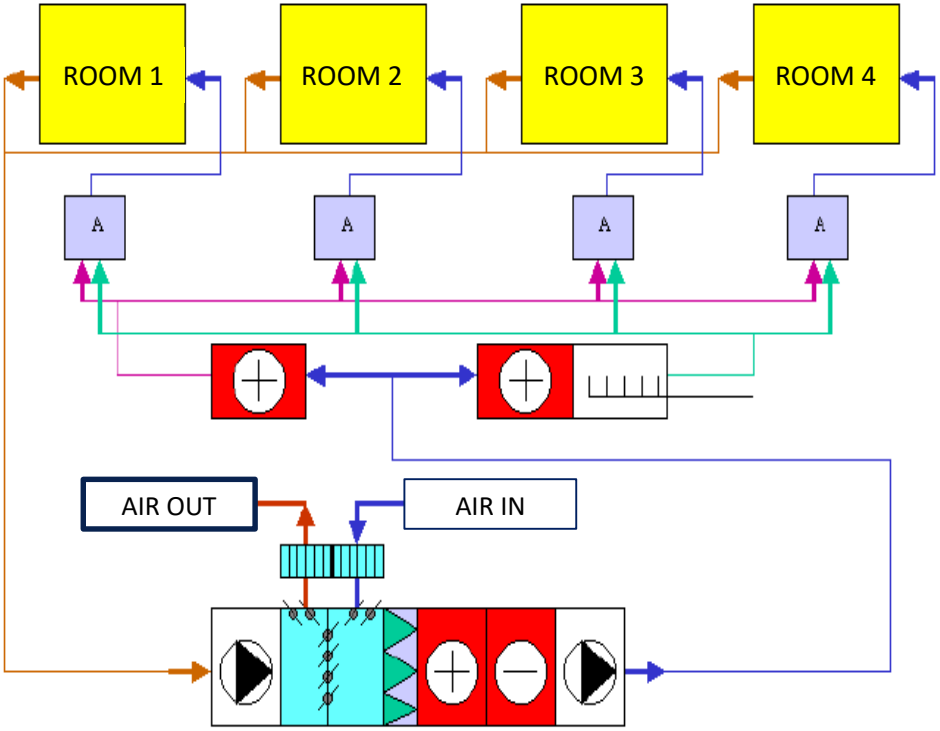

Centralised

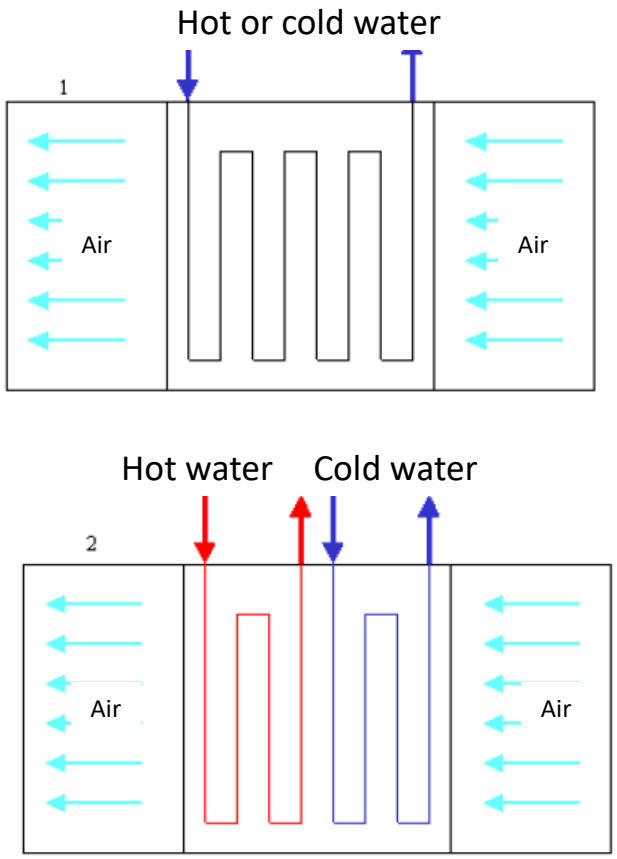

Distributed

Typologies of Air Conditioning Systems

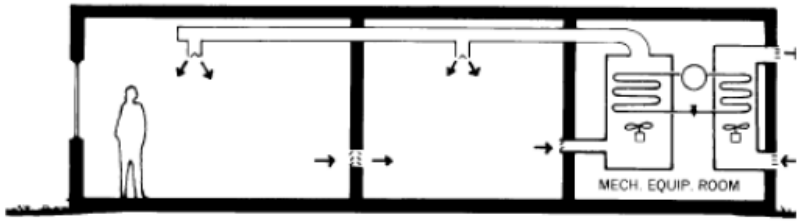

All-air

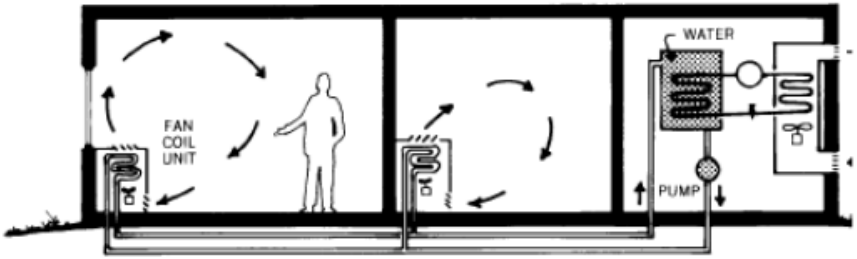

All-water

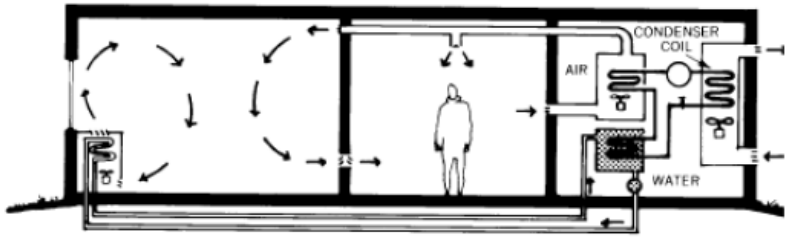

Air-water

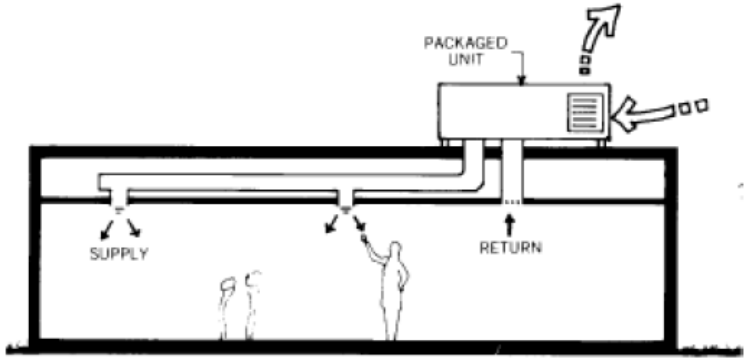

Unitary system

Typologies of Air Conditioning Systems

System	Advantages	Disadvantages
All Air	• Central equipment location • No piping in occupied area • Use of outside air (free cooling) • Easy seasonal change • Heat recovery possible • Closest operating conditions	• Duct clearance • Large ducts - space • Air balancing difficulties
Air Water	• Individual room control • Separate secondary heating/cooling • Less space for ducts • Smaller HVAC central equipment • Central filter, humidification	• Changeover if only two pipes • Operating complex if two pipes • Control is numerous • Fan coil clearance problem • No-shut off for primary air • High pressure for induction • Four pipe system is too expensive
All Water	• Less space • Locally shutoff (individual control) • Quick pull down • Good for existing buildings	• More maintenance in occupied area • Coil cleaning difficulties • Filter • Open window for IAQ
Uni-tary	• Individual room control • Simple and inexpensive • Independent of other buildings • Manufacturer made it ready	• Limited performance • No humidity control (general) • More energy (low efficiency) • Control of air distribution • Filter • Overall appearance

The choice depends on:

- Capacity needed for the plant;
- Whether the building faces N,S,W,E and if and how different zones are defined;
- Thermal loads variability over time;
- Building's characteristics;
- Dimension and use of zones and rooms.

Primary HVAC equipment

Chillers

Cooling Towers

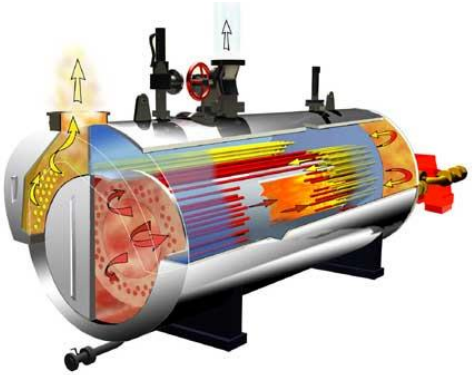

Boilers

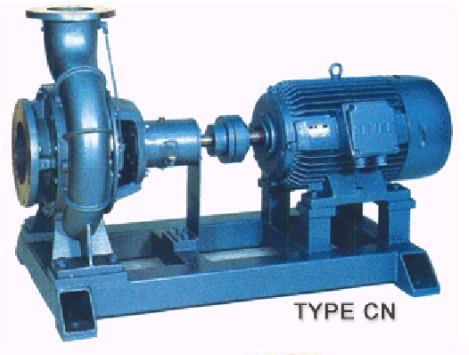

Pumps

Boilers

- A boiler, or heat generator, is constituted by two main sections:
  - A first section where heat is generated;
  - A second section where heat is transferred to the heat transfer (vector).

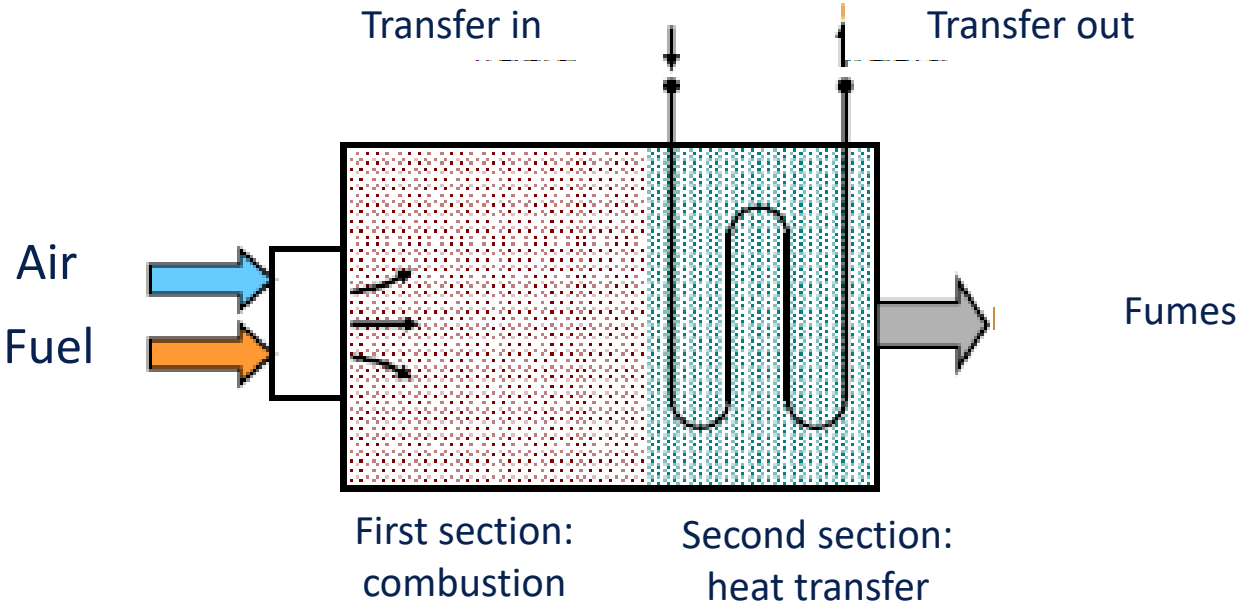

Vapor refrigeration systems

Four major components:

- **Compressor**: to rise the pressure of the gas.
- **Condenser**: to reject heat and condensing the gas.
- **Expansion valve**: reduce the high pressure liquid.
- **Evaporator**: to absorb heat from the space.

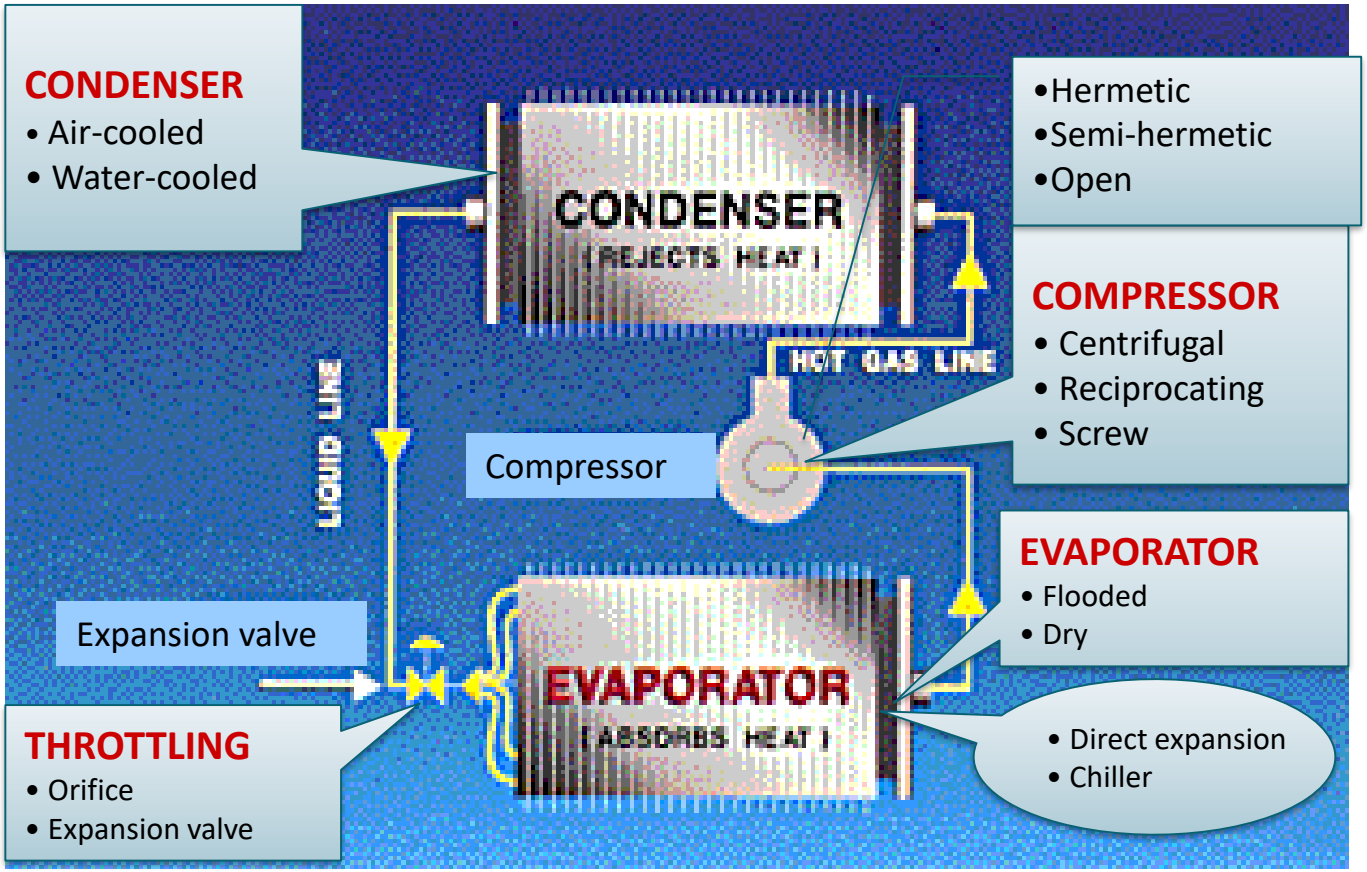

Vapor refrigeration systems

Coefficient of Performance (COP) represents the operation efficiency of a given refrigeration system. The maximum possible COP of a compression cooling machine is determined by:

$$COP_{carnot} = \frac{T_e}{T_c - T_e}$$

COP Calculation (example)

Te = 258 K

Tc = 303 K

te = -15 °C

tc = 30 °C

COP_{max} = 258 / (303-258) = 5.74

$$COP = \frac{refrigeration\ Capacity}{Compressor\ power}$$

Ton of Refr. = kW_{th} of Ref. * 3.51

Vapor refrigeration systems

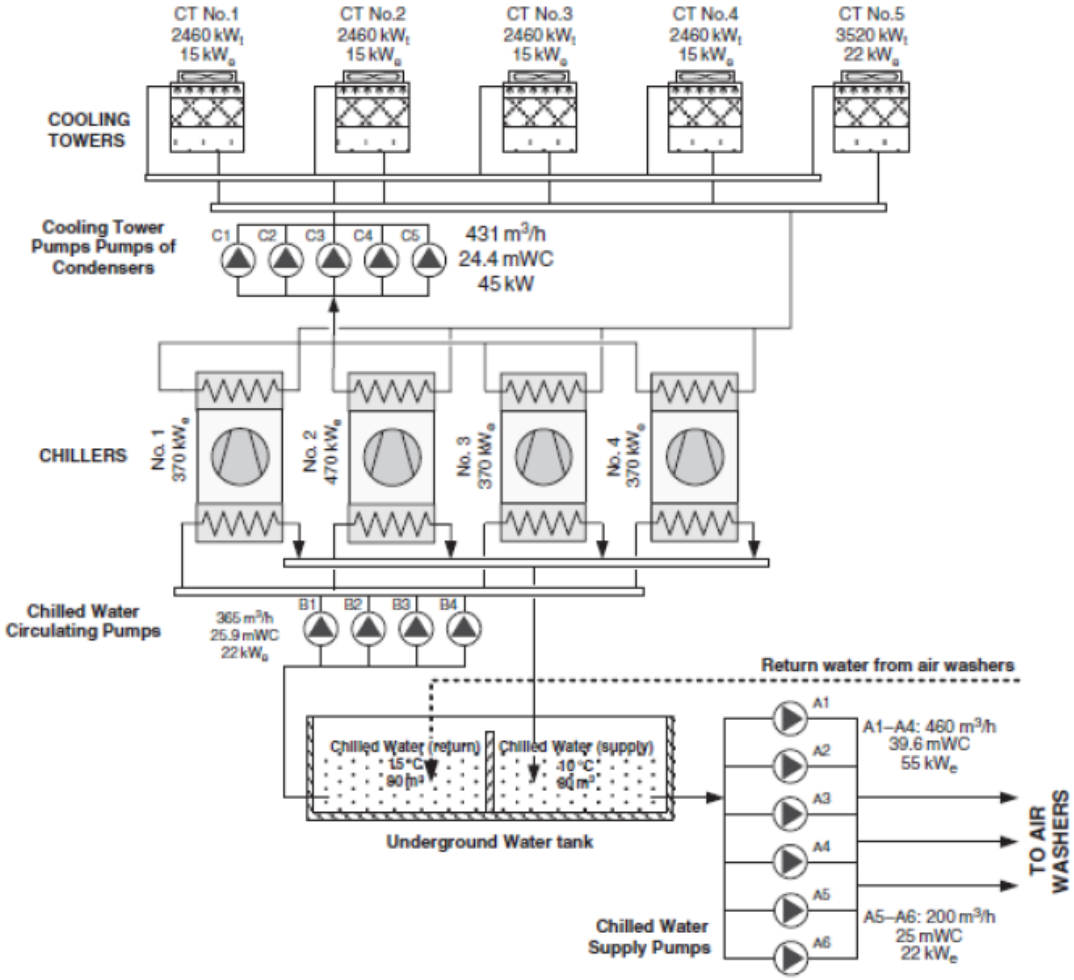

HVAC case study

HVAC in a hotel in Aqaba

HVAC in a hotel in Aqaba

A cooling system in a Hotel in Aqaba, Jordan, consists of:

- 3 screw chillers;
- 2 secondary centrifugal pumps for air handling units (AHUs) ;
- 2 secondary centrifugal pumps for fan coil units (FCUs);
- 3 primary centrifugal pumps and cooling units devices (AHU and FCU).

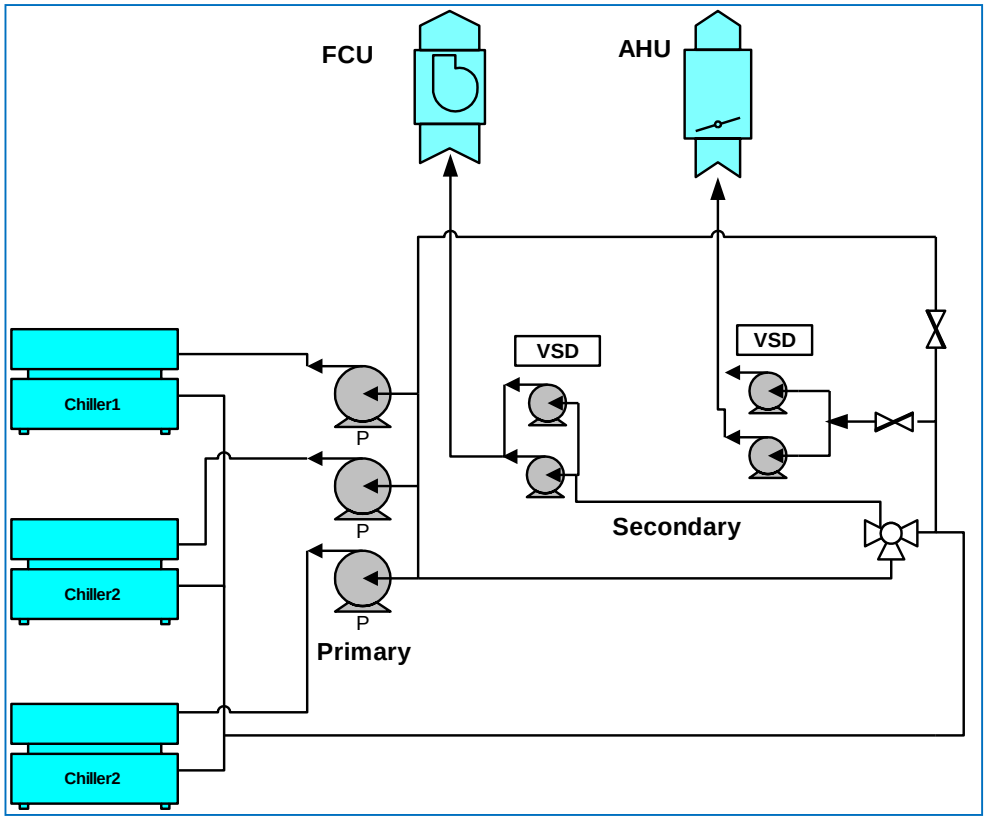

HVAC in a hotel in Aqaba

- The chillers are air-cooled type and each chiller has 4 compressors such that each two compressors work in one cycle.
- Moreover, each chiller has 20 fans over the condenser, where 10 fans are operating per cycle.
- Unfortunately, the hotel staff did not have information on chiller performance, such as cooling capacity, compressor power and coefficient of performance (COP).
- Thus, coefficients of performance (COPs) were estimated by measuring the primary water flow rate, chillers power consumption and chilled water temperature difference of supplied and returned water. The measurements were carried out and logged for every 1 minute for 48 hours.

HVAC in a hotel in Aqaba

- The calculations were carried out as follows:
- $Qe = M \times Cp \times (Tr - Ts)$ (kW)
- $COP = Qe / P$
- Where;
  - Qe: cooling capacity, kW, M: mass flow rate, kg/s, Cp = heat capacity for water = 4.186 kJ/kg/ °C
  - Tr : water return temperature, °C., Ts: water supply temperature, °C., COP: Coefficient of performance , and P: power consumption, kW.

HVAC in a hotel in Aqaba

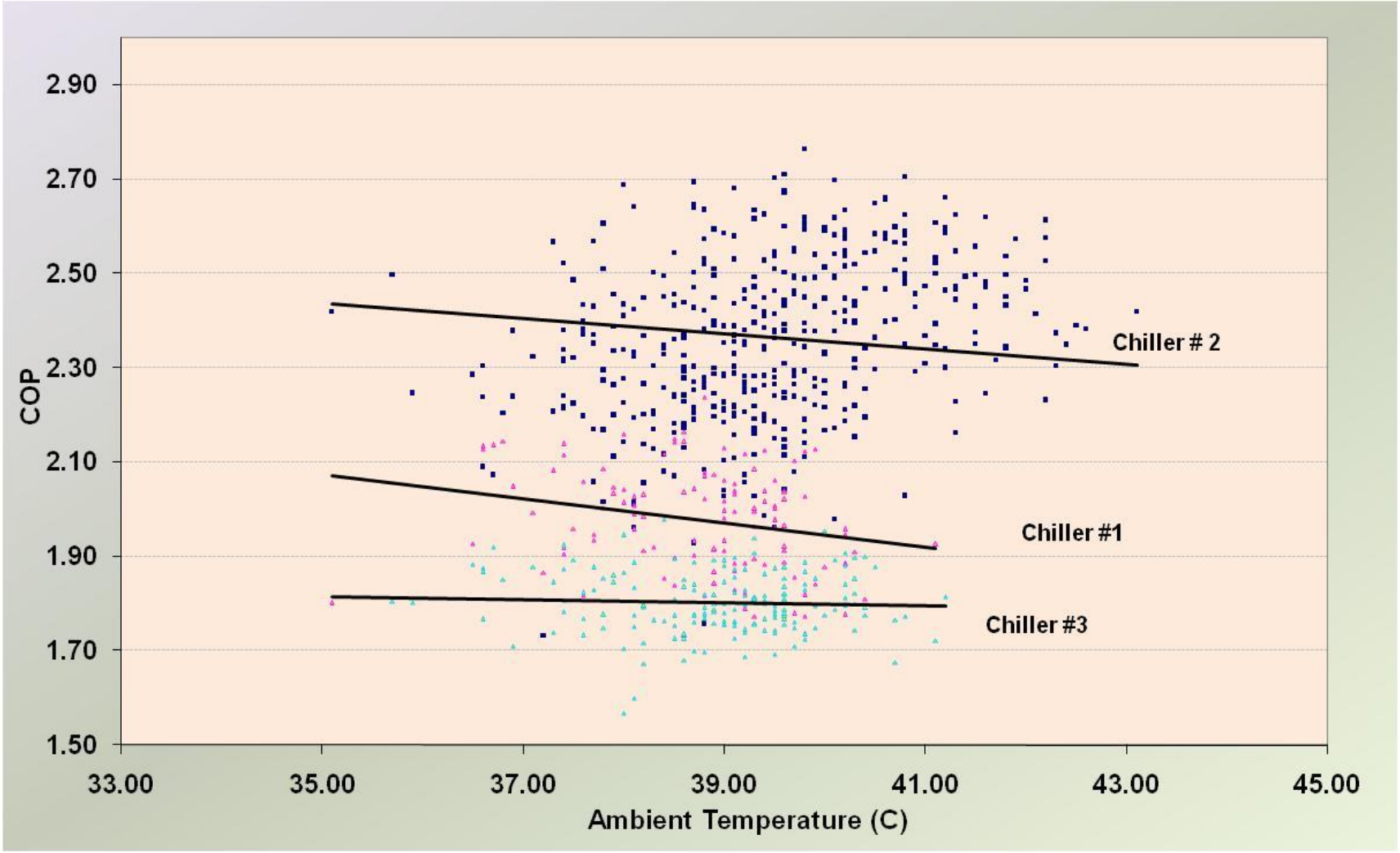

Brainstorming

- What kind of information can you gather and what conclusion would you draw from the previous graph?

HVAC in a hotel in Aqaba

- It was found that most of the times only two chillers are operated during the summer season. Therefore, it is recommended to run the highest efficiency chillers, namely; chiller #2 and/or chiller #1.

- Chiller #3 can be run only if one of these chillers is out of order.

- This energy efficiency measure has no initial cost and savings have been estimated in 130.000 kWh and 32.600 Euros per year.

HVAC in a pharmaceutical company

- Try to identify possible causes of system's energy behavior illustrated in the following slides.

HVAC in a pharmaceutical company

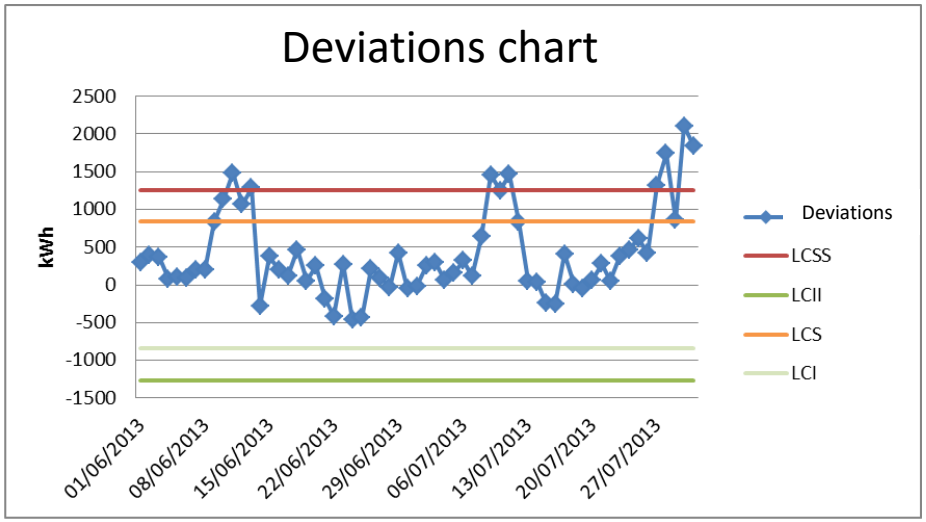

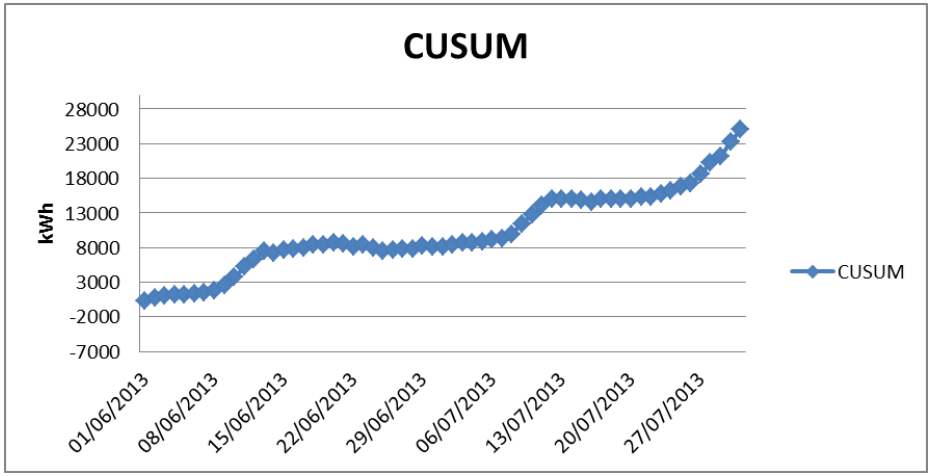

- DEVIATIONS = difference between real and forecasted consumption;
- CUSUM = cumulative sums of deviations over time.

HVAC in a pharmaceutical company

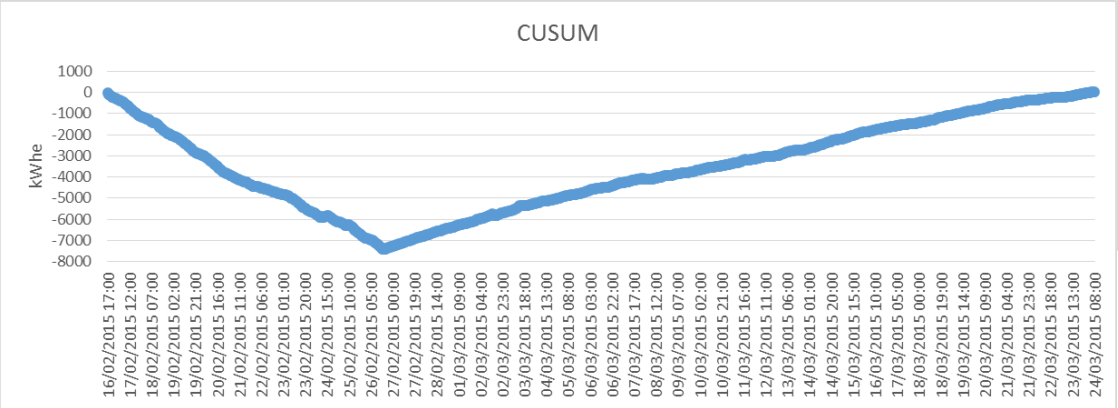

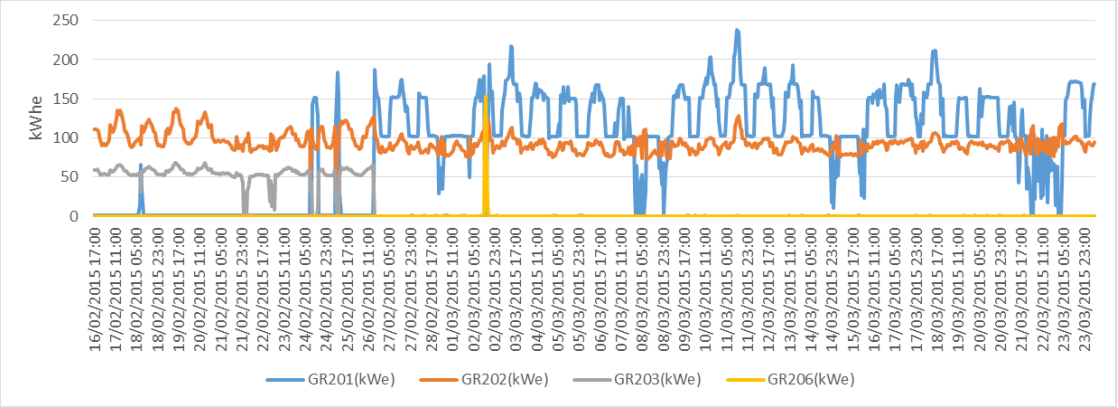

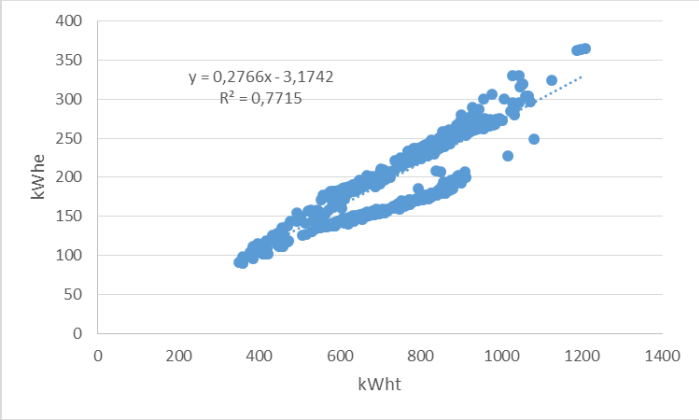

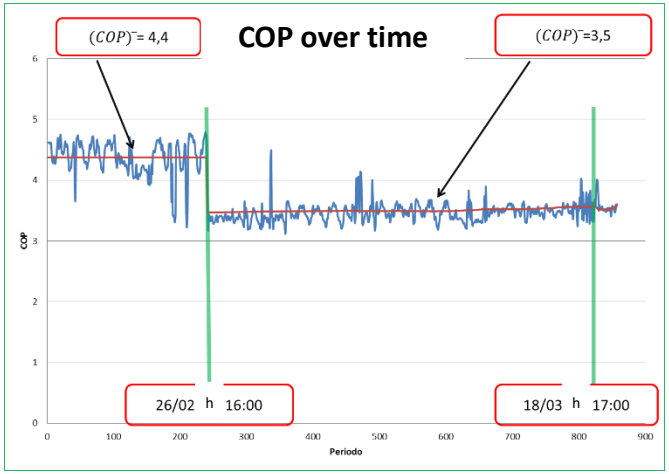

HVAC in a pharmaceutical company

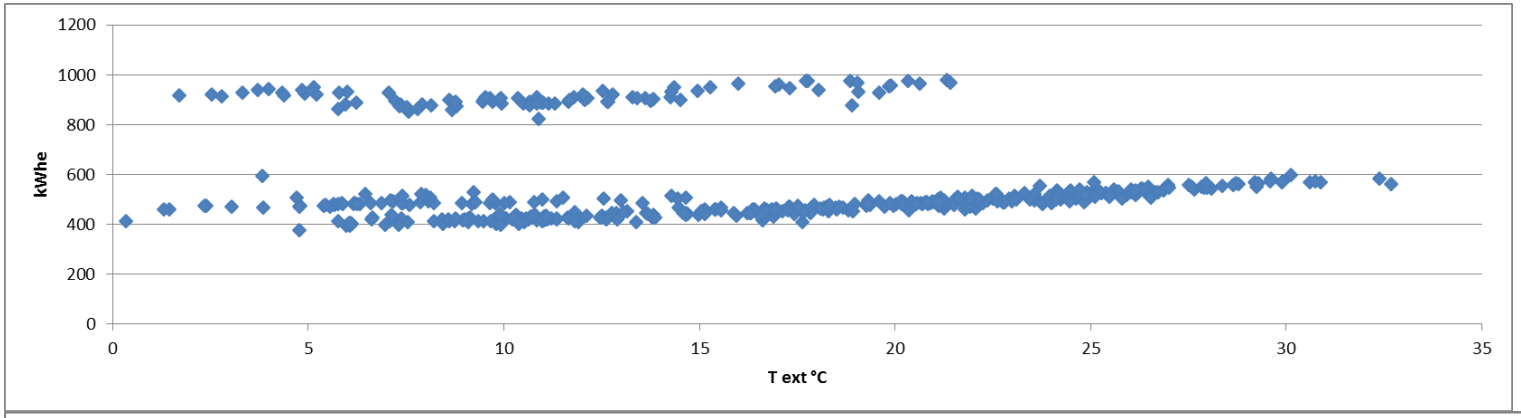

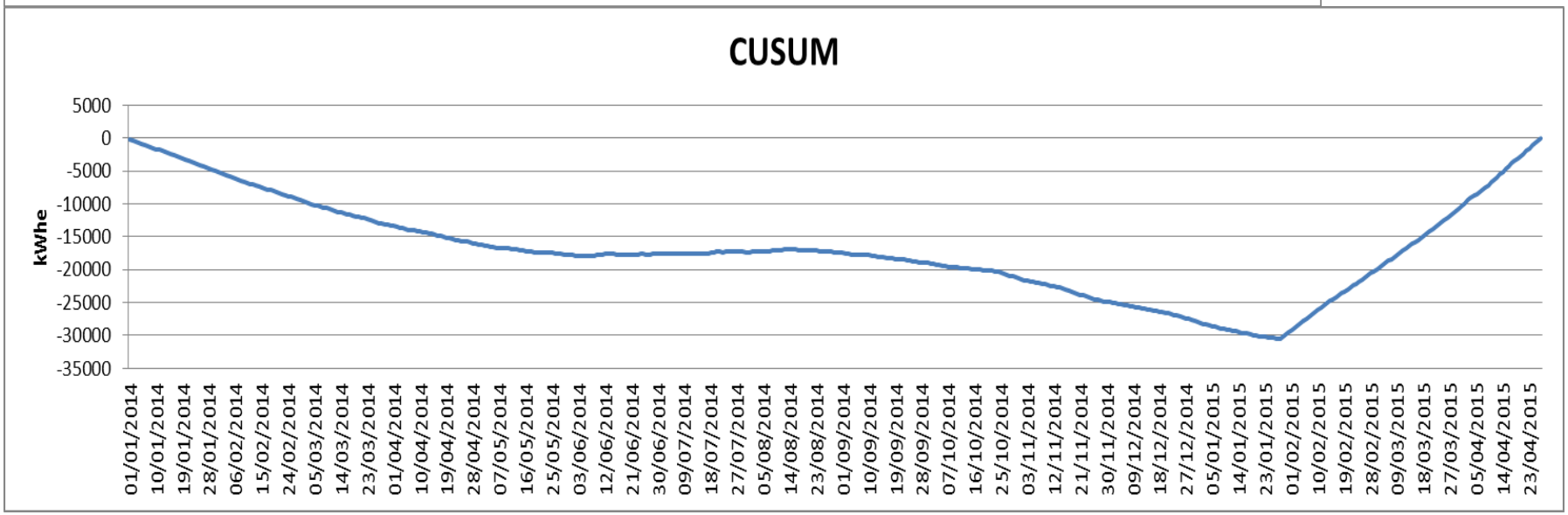

Secondary HVAC equipment

Secondary HVAC equipment

- Air handling equipment (air handling units and fan coil units).
- Ducts and air outlets (diffusers, grilles, linear slot diffusers).
- Terminal units: are devices at the end of a duct that transfer heating or cooling.
- Controls: turn equipment on/off, adjust energy outputs (chillers, boilers), adjust flow rates (fans, pumps, coils), adjust temperatures (air, water, space).

Air Handling Units (AHU)

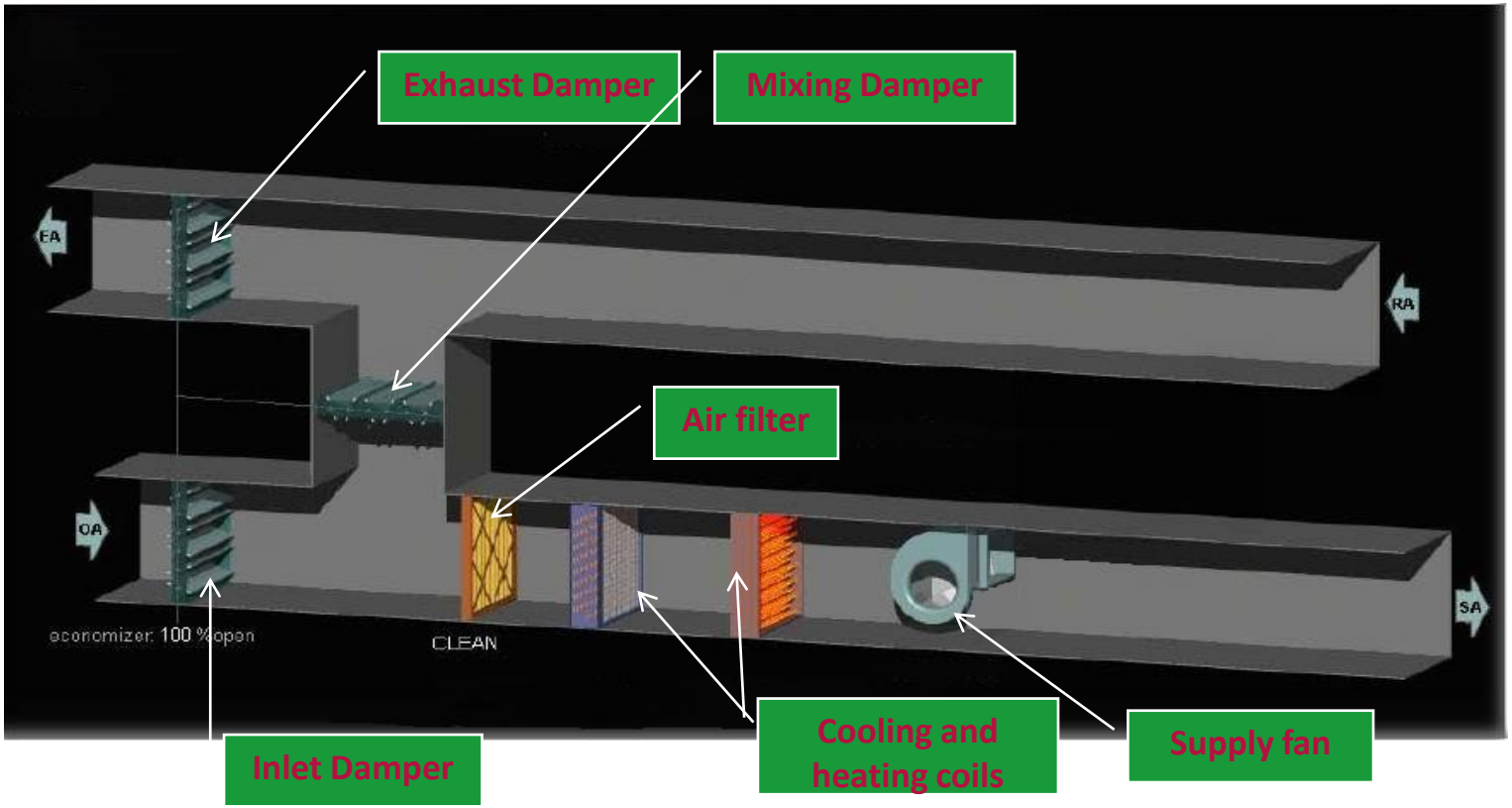

Air Handling Units (AHU) vs Fan Coil Units (FCU)

AHU

- Large ductwork is needed.
- AHU consists of:
  - Filters.
  - Fans.
  - Coils
- Maximum air volume is 19.000 l/s.
- Configuration is complicated and needs large areas.
- Should be designed and manufacture for each single application.

FCU

- Less pipework is needed.
- FCU consists of:
  - Filters.
  - Fans.
  - Coils
- Maximum air volume is 1.100 l/s (and can be quite noisy!).
- Configuration is simple and needs small areas.
- Easily available, always in stock.

Single duct system

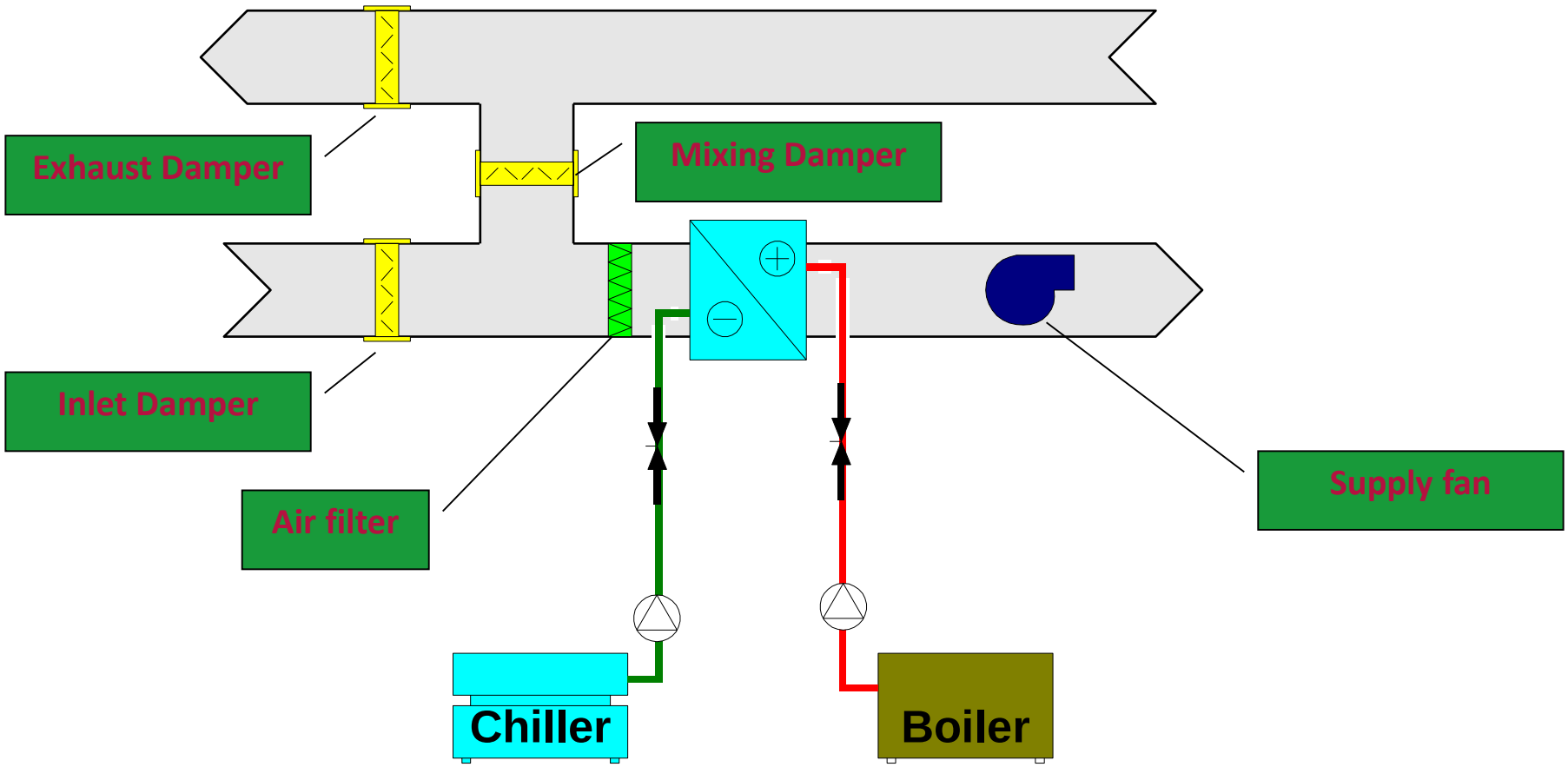

Duel duct system

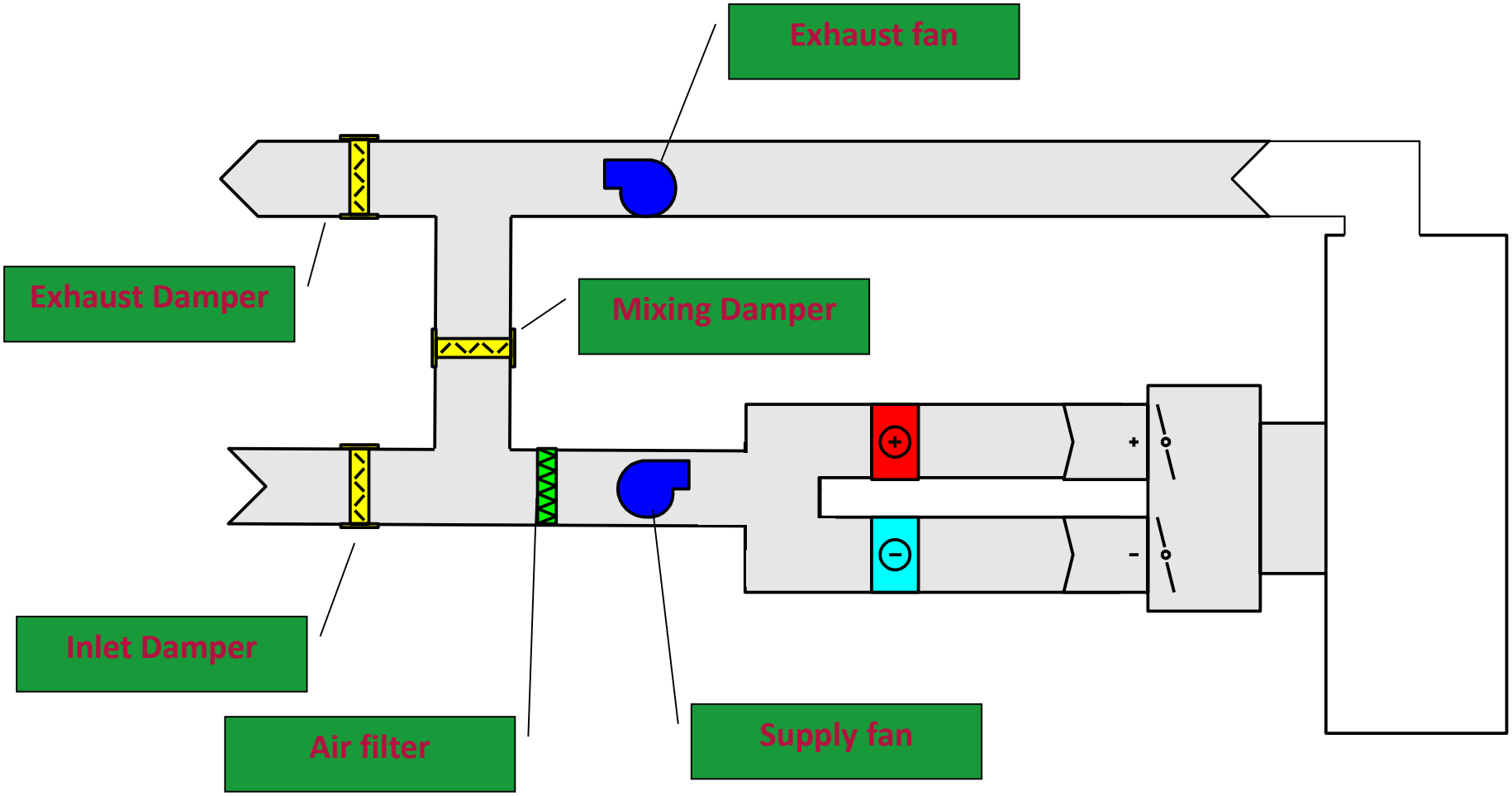

Humidity control

- Humidity: amount of water vapor in the air.
- Humidification – The air is too dry and water vapor must be added for comfort.
- Dehumidification – The air is too wet and water vapor must be removed for comfort.
- HVAC systems typically over-cool the air to remove water vapor, and then may have to heat the air back up – this called reheat, and requires additional energy.

Temperature control

- It is possible to vary the temperature of the supply air to the space while keeping the air flow rate constant. This is the constant volume, variable temperature approach.

- It is possible to vary the air flow rate while keeping the supply air temperature constant. This is the variable volume constant temperature approach.

- It is possible to vary the supply air temperature and the flow rate, as in variable volume reheat system.

Constant Air Volume (CAV)

- It is used to cool the inner zones (uniform cooling load), such as operating rooms, libraries and museums.
- Simplest System.
- Constant airflow.
- Temperature control system.

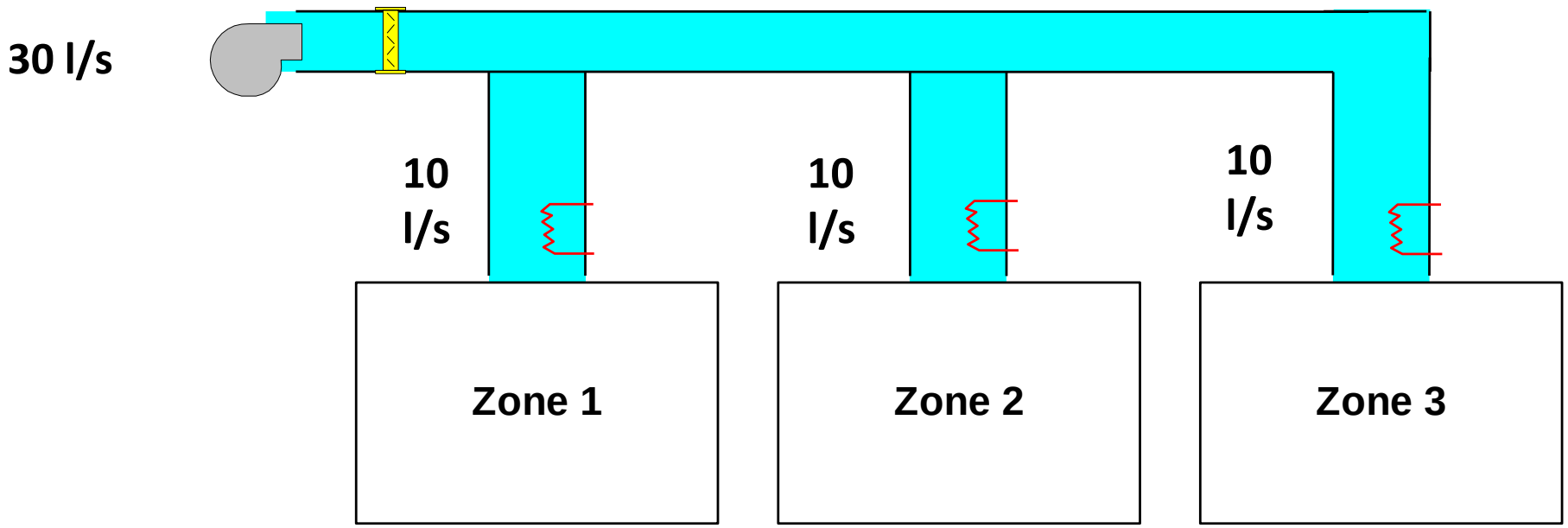

Variable Air Volume (VAV)

- It is used to cool the perimeter areas which have variable cooling loads. For example, common areas in hotels and hospitals and theaters.
- Constant air :temperature (55oF/ 13o C).
- Modulate airflow to meet cooling loads.
- VAV types:
  - By pass VAV box.
  - Variable speed drive (VSD).

Variable Air Volume (VAV)

By pass VAV box.

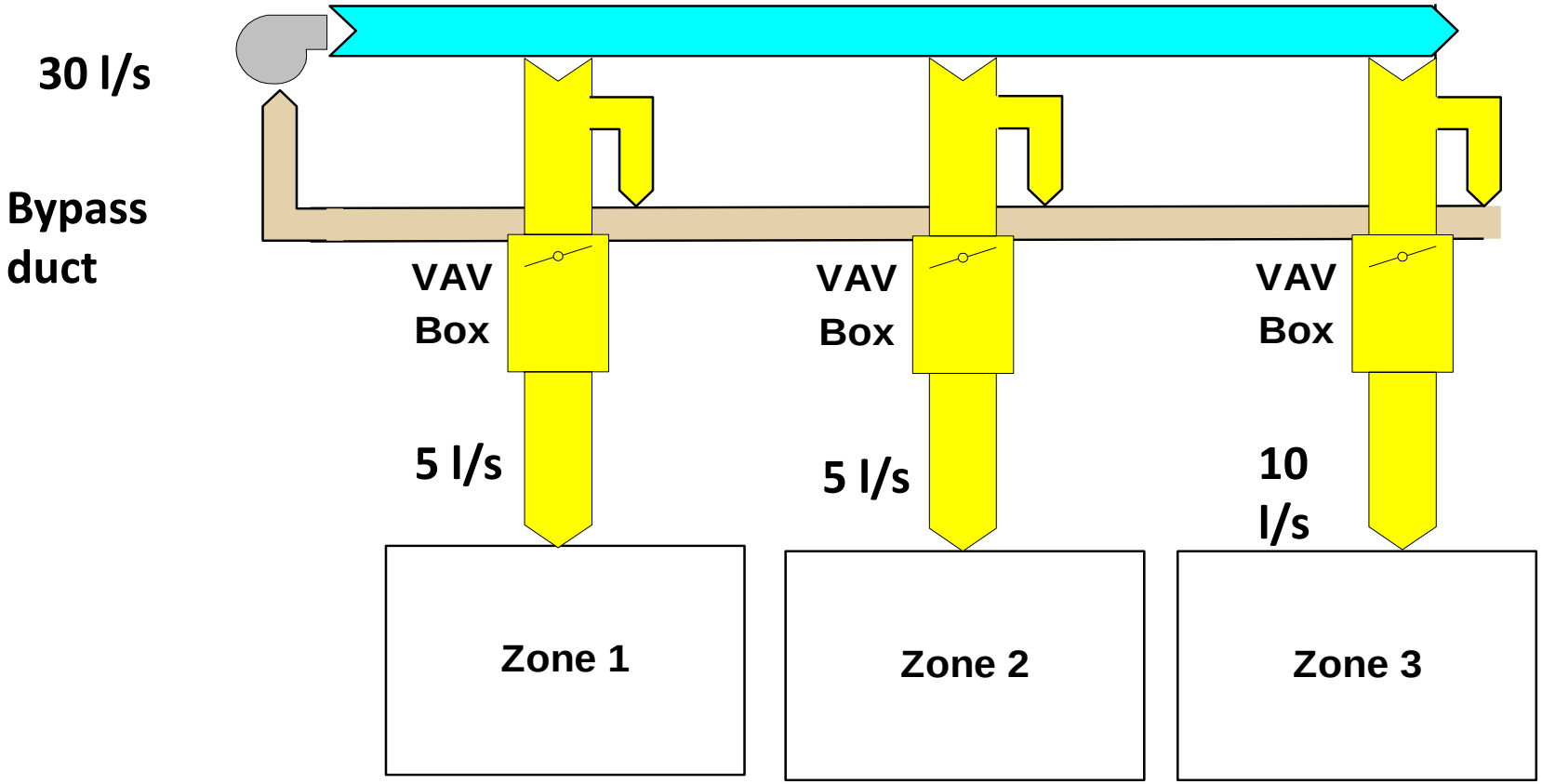

Variable Air Volume (VAV)

Variable frequency drive (VFD).

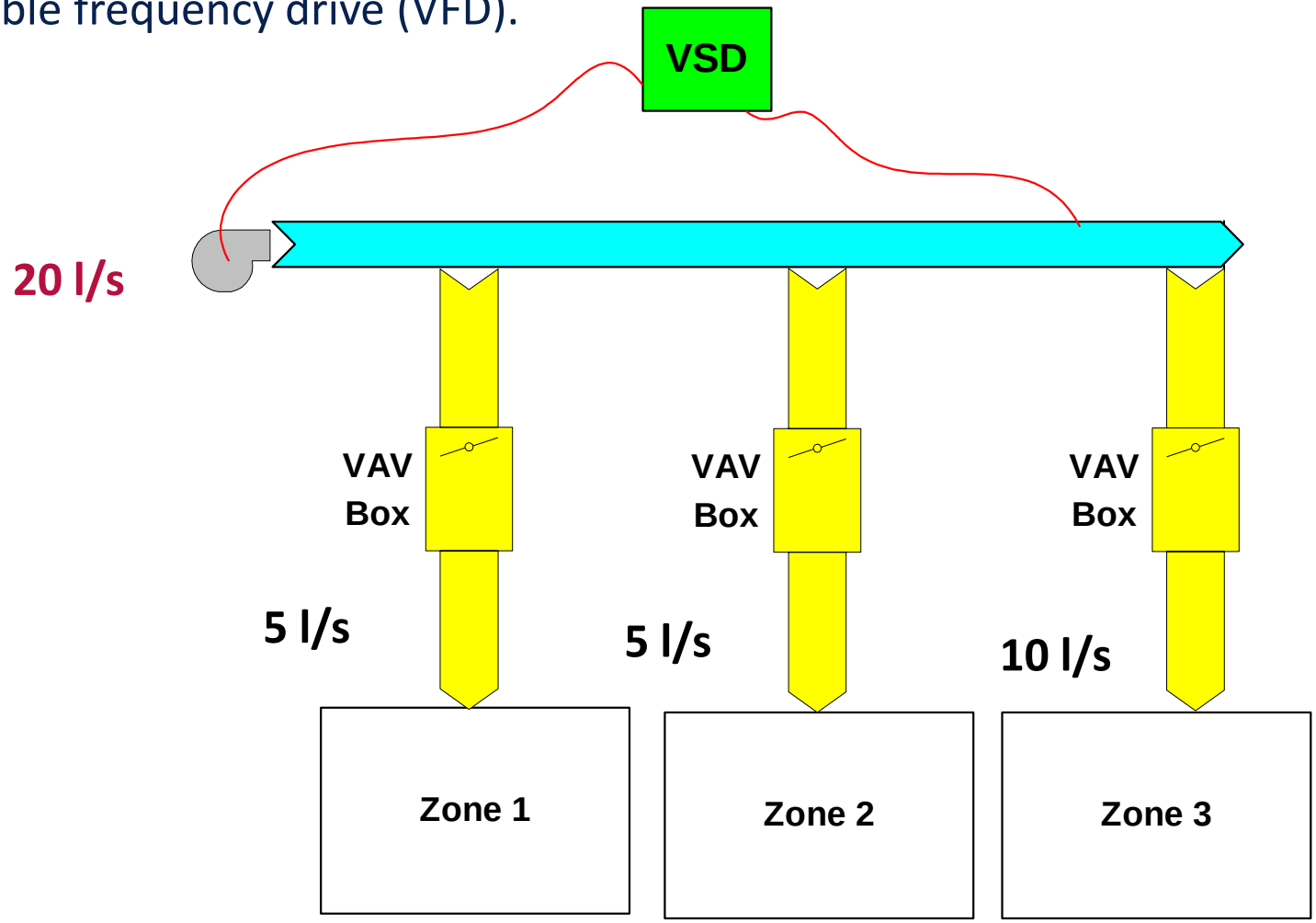

Economizers

Free cooling source: when available, it is possible to use cool outdoor air instead of mechanically cooled air.

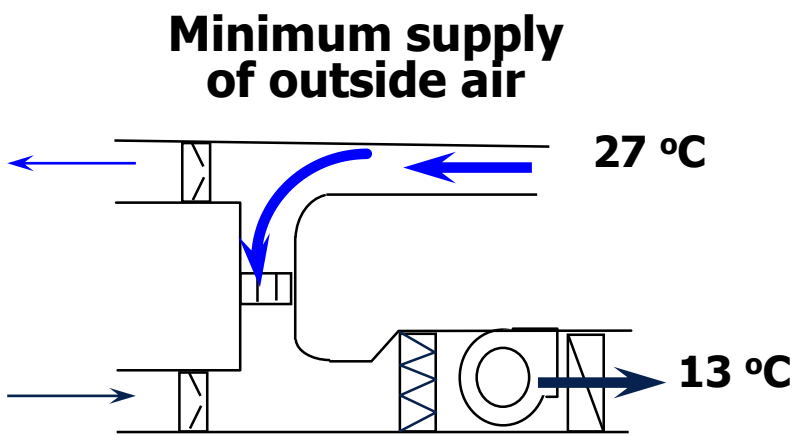

Normal Operation

Outside air dampers are positioned to provide the minimum outside air

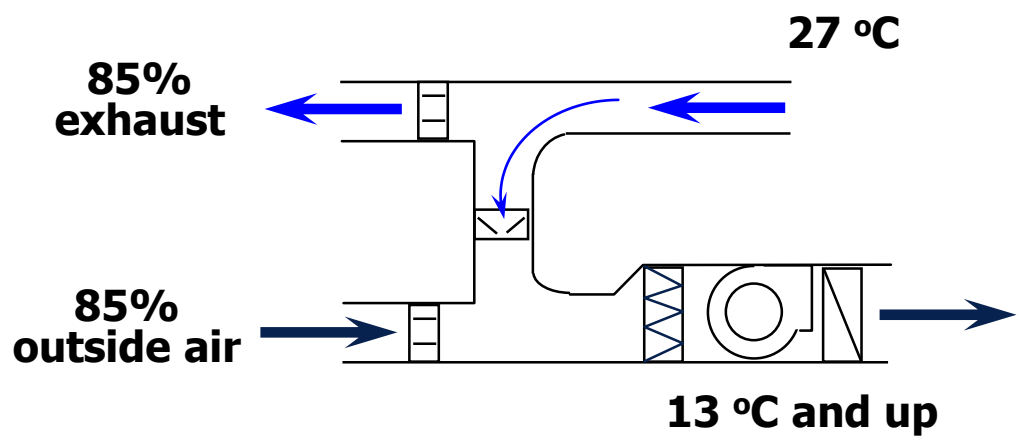

Economizer Operation

Outside air dampers are fully open. Maximum outside air is provided

Secondary HVAC equipment case study

A 5-star hotel

- In a 5-star hotel it was demonstrated that some chillers were running during winter season (February, March and November).
- It is recommended during these period to introduce fresh outdoor air to cover the load.

A 5-star hotel

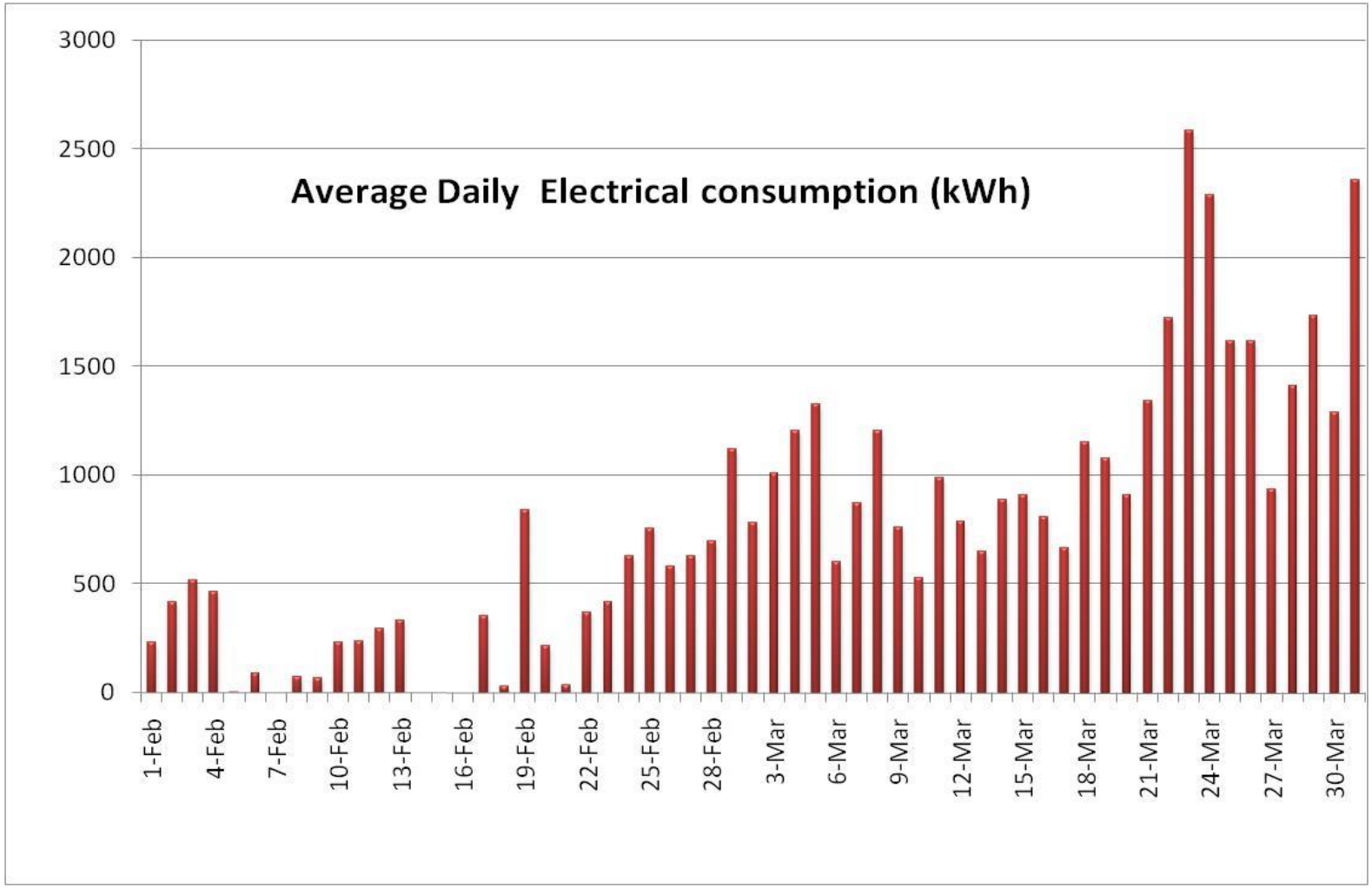

A 5-star hotel

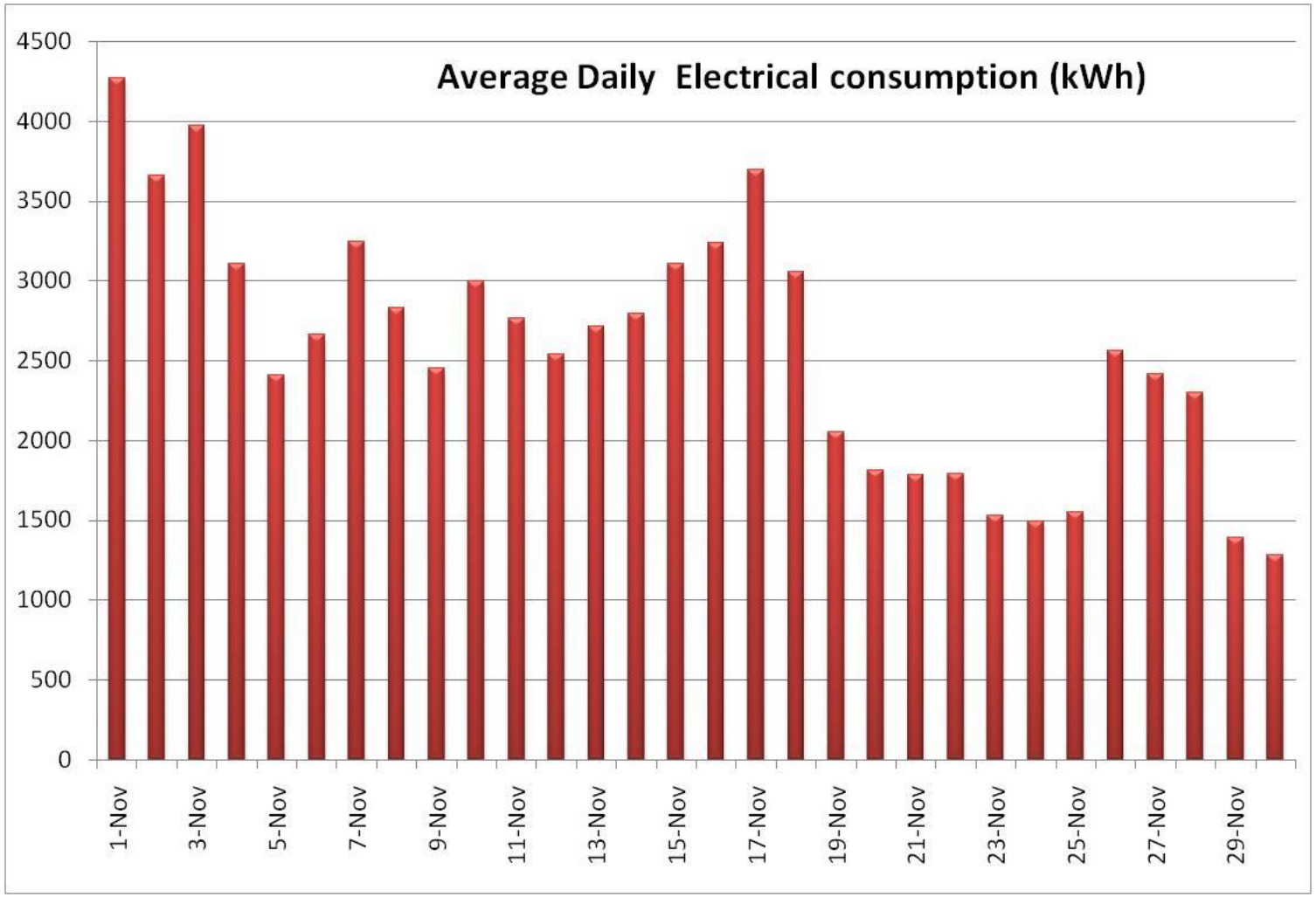

A 5-star hotel

Analysis of savings achieved by introducing the economizer:

- Total Energy Saving = 12.188 kWh
- Total cost of energy saving = JD 1.100
- Investment (increasing the intake area + temperature) = JD 2.000
- Payback Period = 1.8 years

Main energy conservation measures

General energy conservation measures

1. Make sure all pipings are well insulated (especially those where chilled water flows) and the insulation layer is correctly dimensioned;

2. Reduce conditioned volumes where possible (divide zones with different required temperatures, use false ceilings, etc.);

3. Reduce thermal loads where possible (both external, especially by paying extra attention when creating the project for the building envelope, and internal, especially during operation and maintenance);

General energy conservation measures

4. Considering chillers:
   - Make sure all components are well maintained;
   - Make sure to provide an adequate amount of chilled and cooling water;
   - Try to keep the load as uniform as possible;
   - Adequately set and keep under control the condenser and the evaporator;
   - When possible use adsorption chillers (exploiting residual thermal energy instead of electricity);

5. Keep coils clean;

General energy conservation measures

6. Use high efficiency motors;
7. Use VSDs with secondary chilled water pumps;
8. Use VAV and VSDs in common areas;
9. Night-flush with cool air;
10. Use outside air economizers where possible.

Contact us!

www.meetmed.org
meetMED Project
@meetmed1
info@meetmed.org

Funded by the European Union